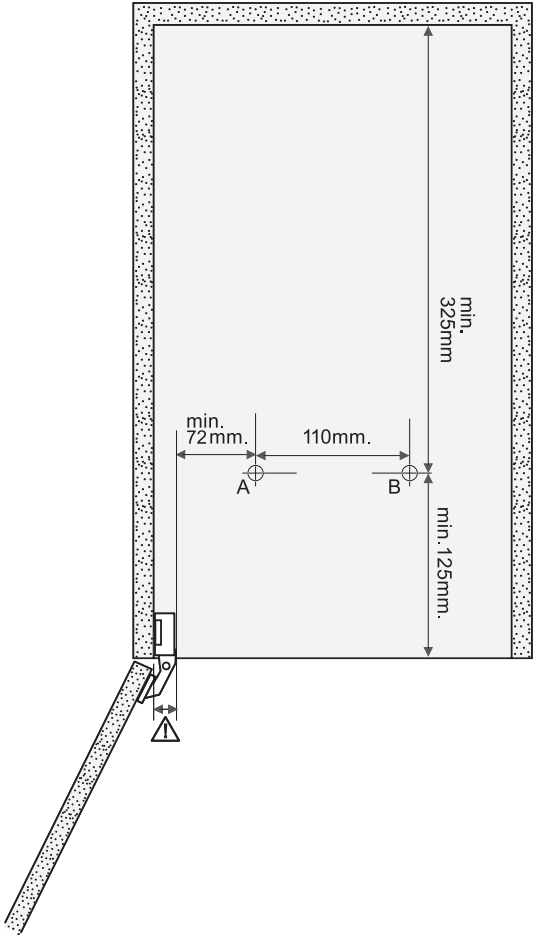

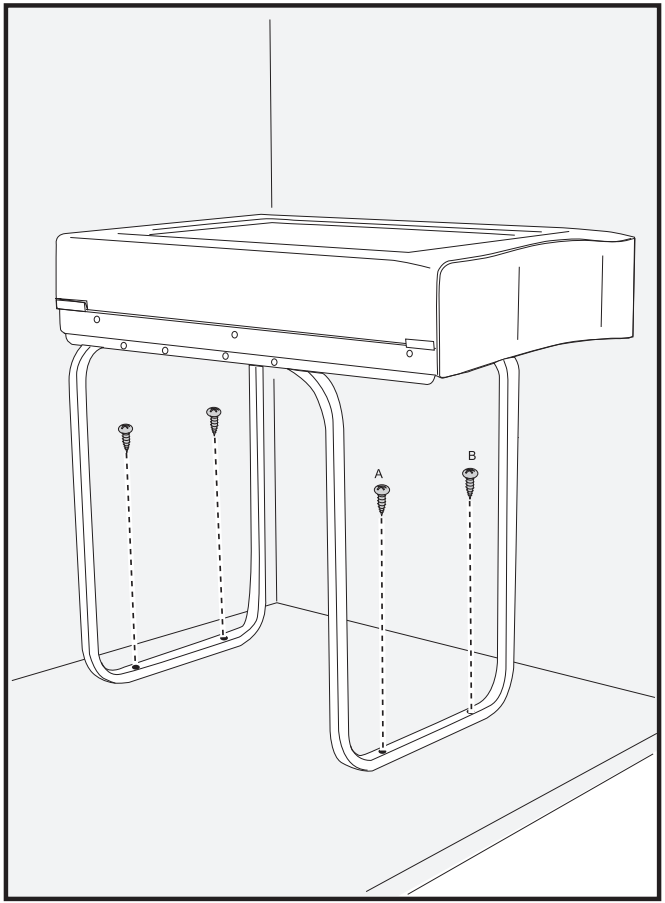

© 05/2017